A3

DO NOT SCALE

Copyright ABgene®
This drawing and/or any technical information relating to it is issued in strict confidence and may not be reproduced or used for manufacture without written permission. Upon receipt of which it is the users responsibility to seek confirmation of any dimensions and production tolerances.

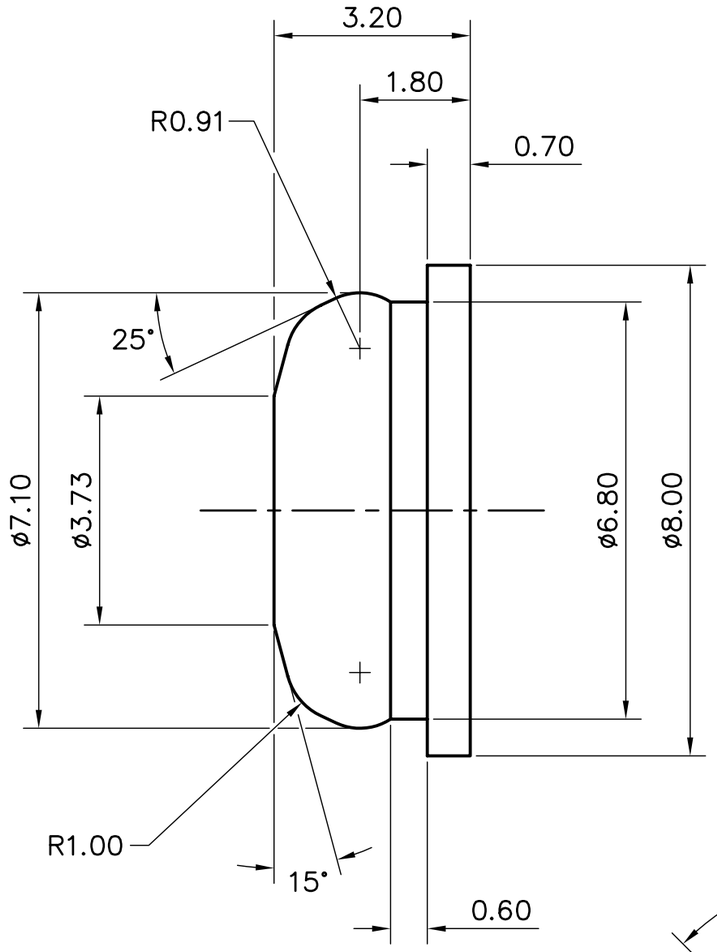

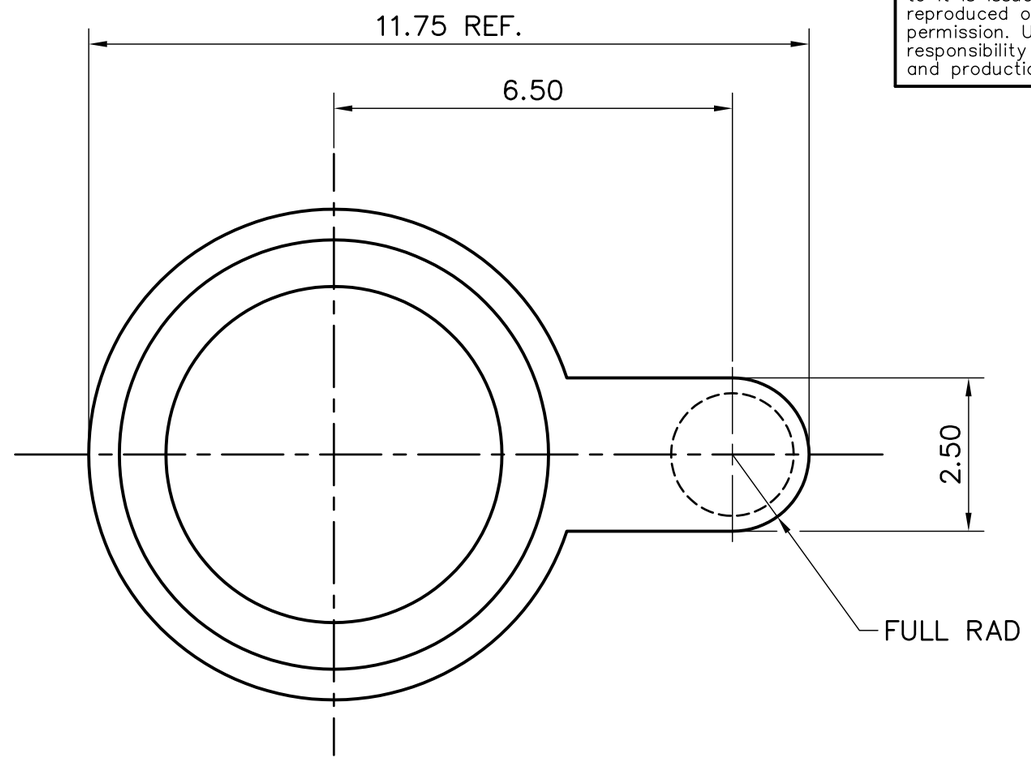

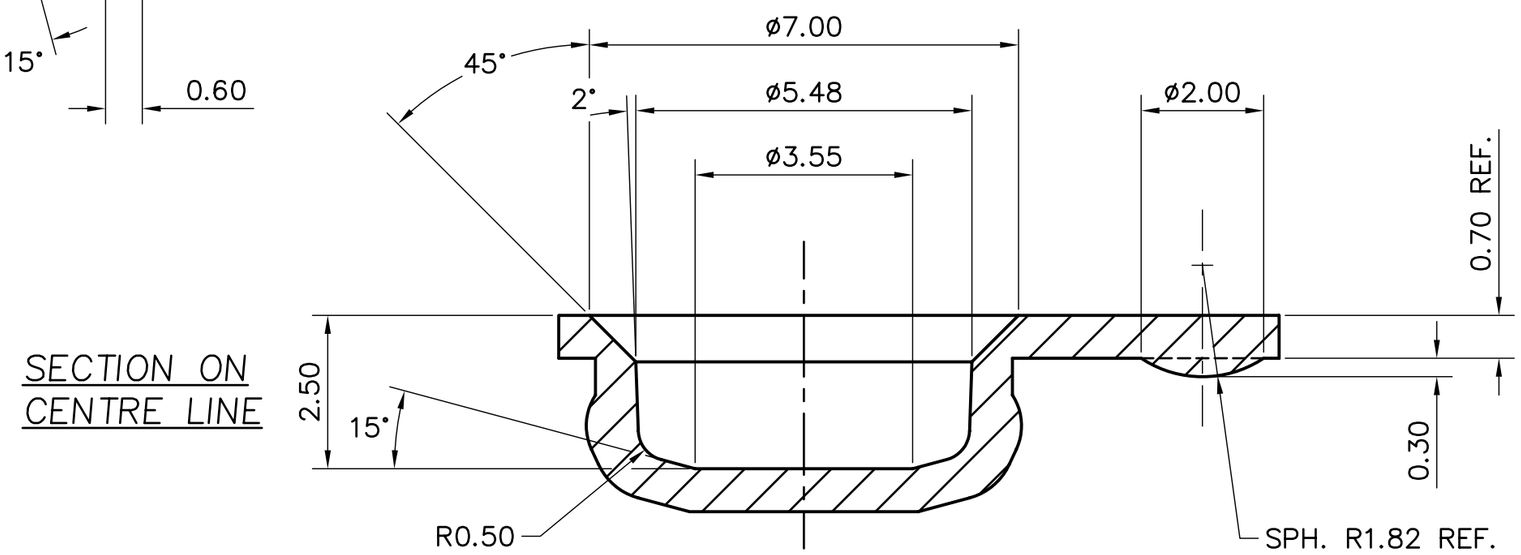

SECTION ON CENTRE LINE

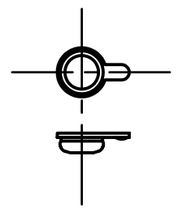

ACTUAL SIZE

Pub No. MAN0014440

ISSUE	DRAWN	DATE	AMENDMENT
.	.	.	.

GENERAL TOLERANCES (UNLESS OTHERWISE STATED)

0 ± 0.25
0.0 ± 0.20
0.00 ± 0.10
ANGULAR ± 0°30'

ALL DIMENSIONS IN MILLIMETRES

DEVELOPMENT TITLE	DRAWN E.C.D.	DATE 11/2/03	ADVANCED BIOTECHNOLOGIES
	CHECKED	DATE	
MATERIAL ENGAGE	APPROVED	DATE	
CAD FILE 12CN–C1	SCALE 10:1	SHEET No. 1 OF 1	

TITLE: STORAGE PLATE CAP

CAT. No. .

DWG. No. EA03–001C

ISSUE A